Hyundai Kona: Dual Clutch Transmission Control System / Clutch Actuator Assembly Description and operation

transmissionmanuals.com

Description

- Components location : DCT (Dual Clutch Transmission)

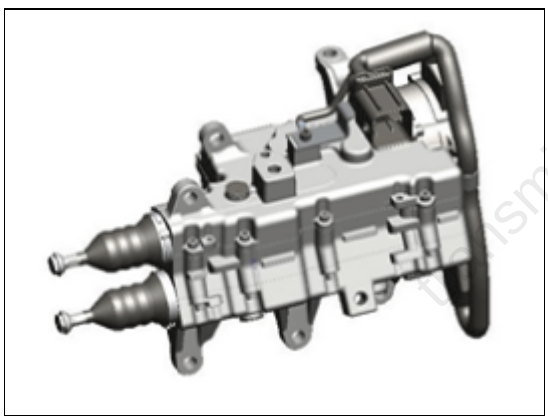

- Function
  The clutch actuator receives signals from the Transmission Control Module (TCM) and controls the clutch.